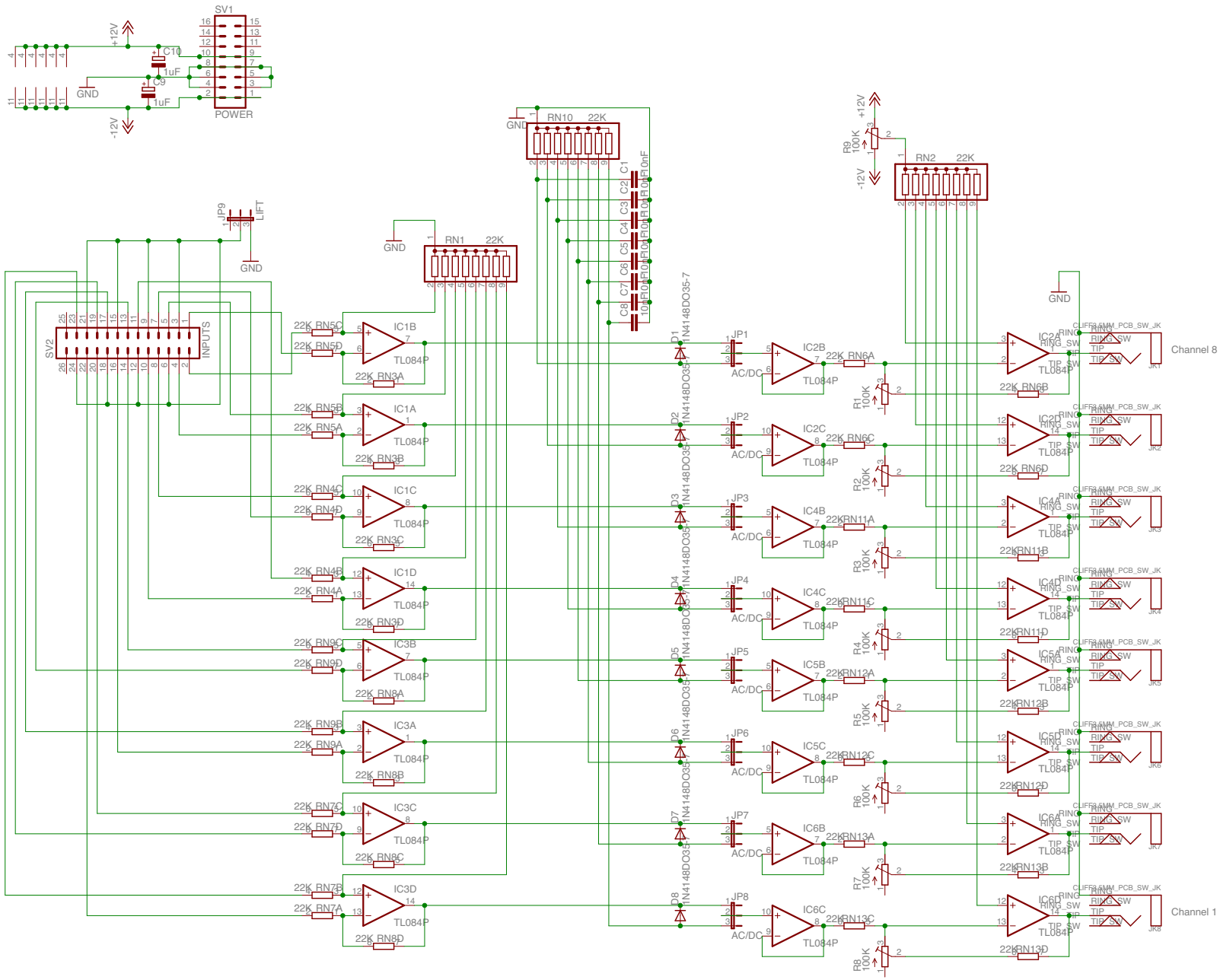
SV1
POWER
+12V
-12V
GND
C10
C9
1uF
RN10 22K
RN1 22K
RN2 22K
JP9
LIFT
SV2
INPUTS
IC1B
IC1A
IC1C
IC1D
IC3B
IC3A
IC3C
IC3D
IC2B
IC2C
IC4B
IC4C
IC5B
IC5C
IC6B
IC6C
IC2A
IC2D
IC4A
IC4D
IC5A
IC5D
IC6A
IC6D
TL084P
1N4148DO35-7
AC/DC
R1 100K
R2 100K
R3 100K
R4 100K
R5 100K
R6 100K
R7 100K
R8 100K
R9 100K
Channel 8
Channel 1